Indian Institute of Technology, Mandi

Lab Sheet-2

Course name: Foundations of Design Practicum

Course code: IC102P

Title: Advanced 3D modelling and assembly.

Problem 1: Design of bolt.

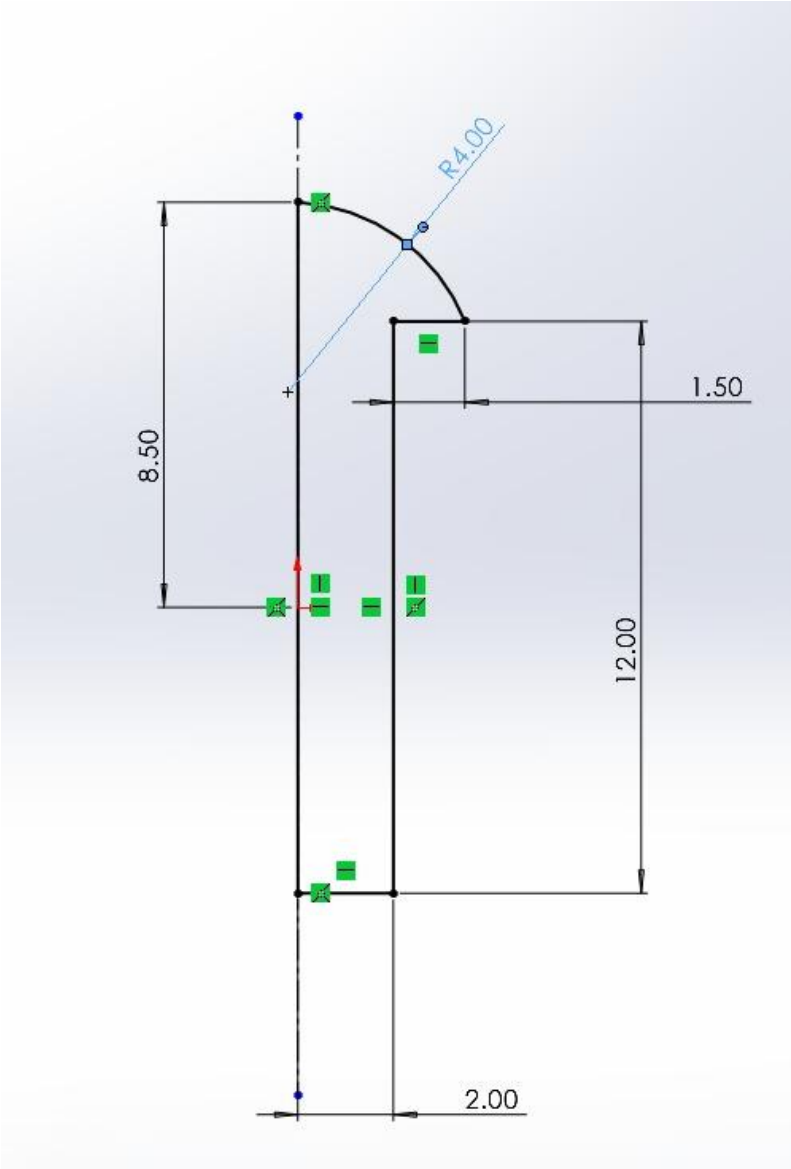

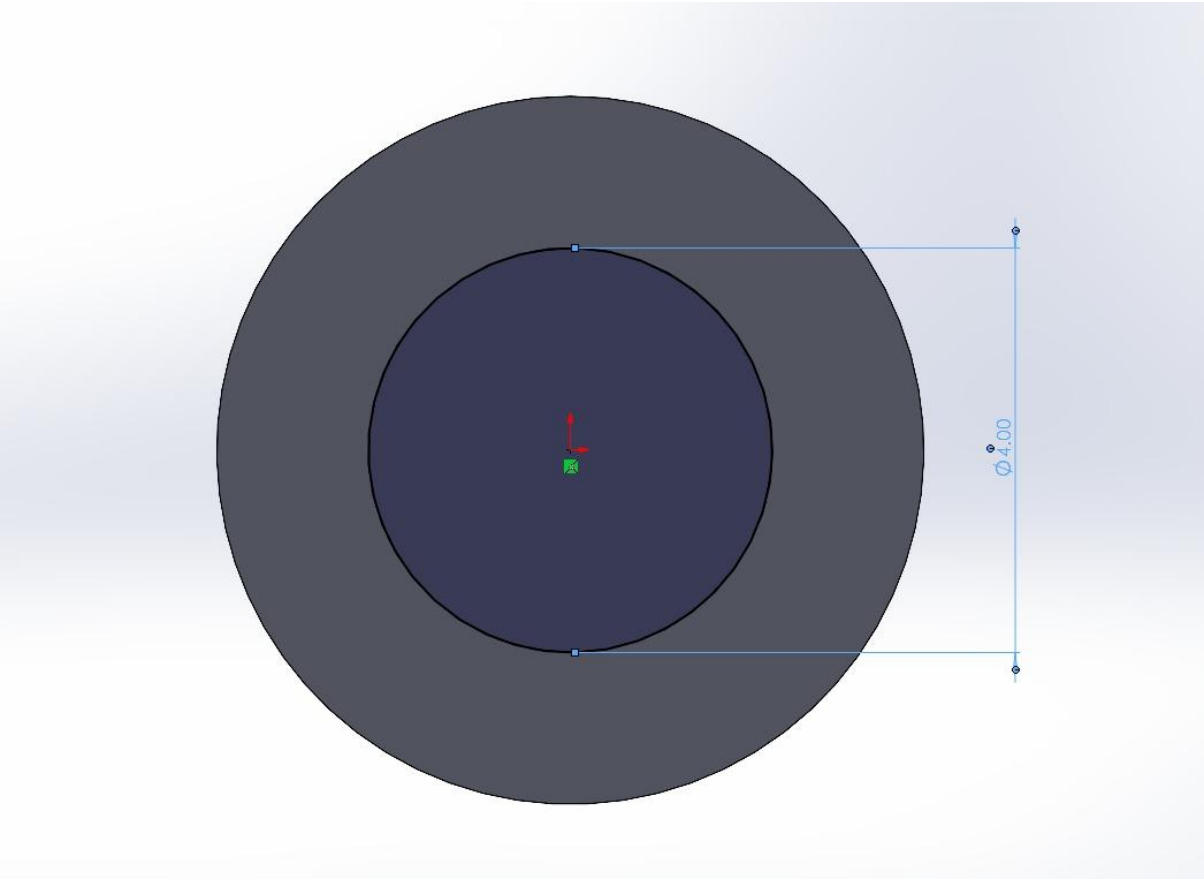
Ø4.00

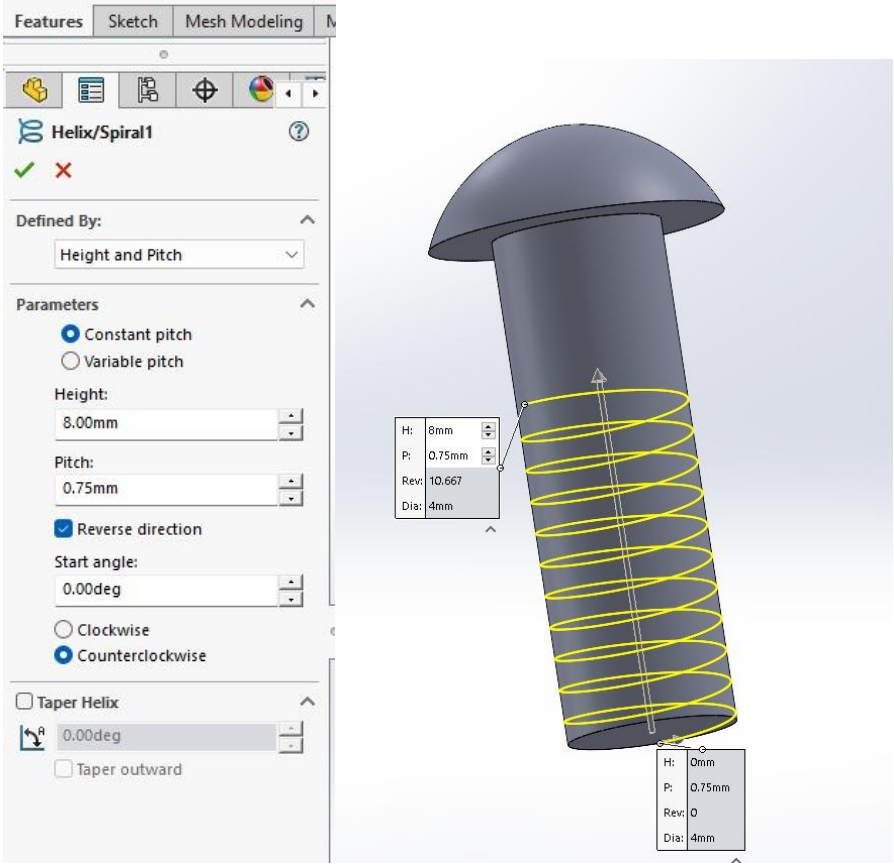
Features
Sketch
Mesh Modeling
Helix/Spiral1
Defined By:
Height and Pitch
Parameters
Constant pitch
Variable pitch
Height:
8.00mm
Pitch:
0.75mm
Reverse direction
Start angle:
0.00deg
Clockwise
Counterclockwise
Taper Helix
0.00deg
Taper outward
H: 8mm
P: 0.75mm
Rev: 10.667
Dia: 4mm
H: 0mm
P: 0.75mm
Rev: 0
Dia: 4mm

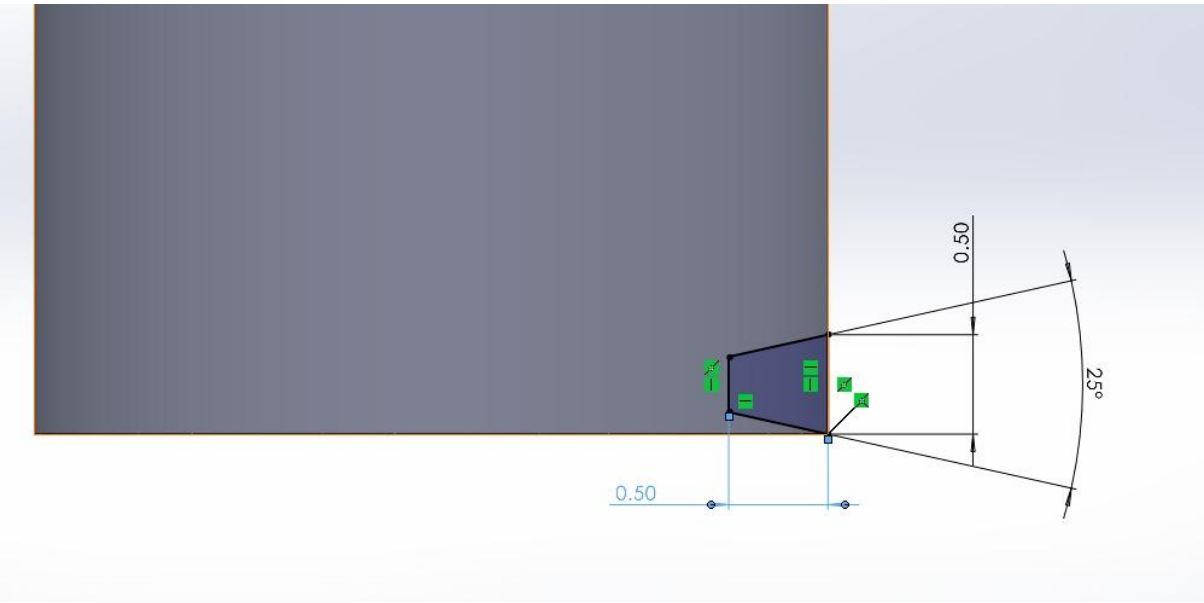
0.50
0.50
25°

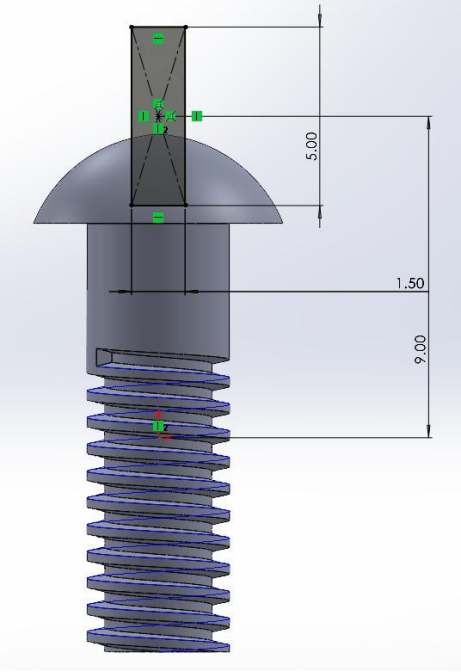
5.00
1.50
9.00

Problem 2: **Example of assembly.**

Step 1: Select a part

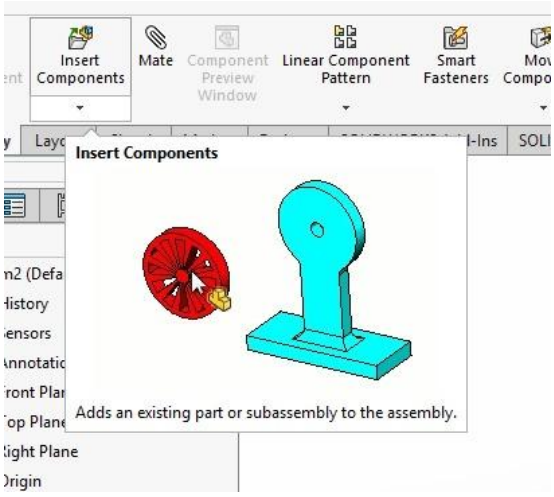

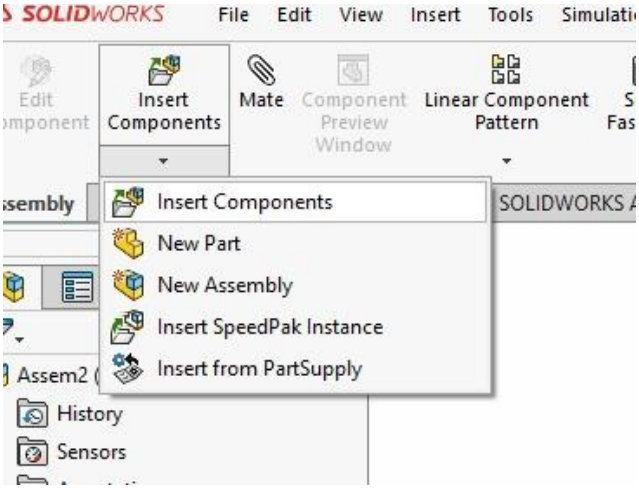

Step 2: Select the desired mate.

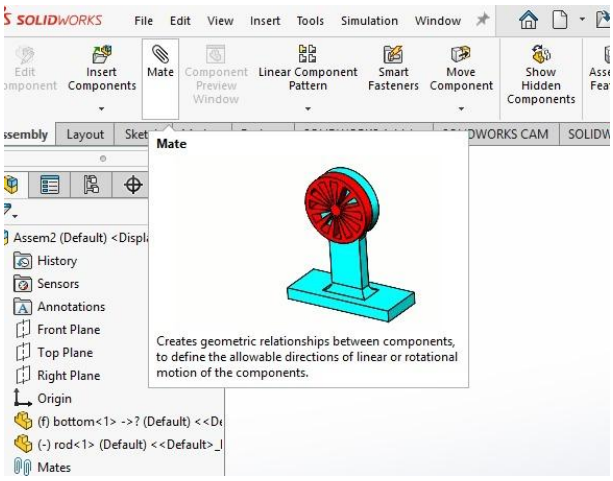

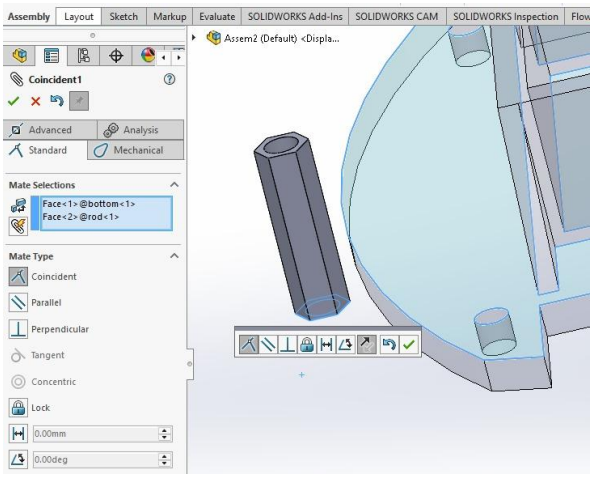

Note: Parts used in the wheel robot assembly.

1) Upper chassis

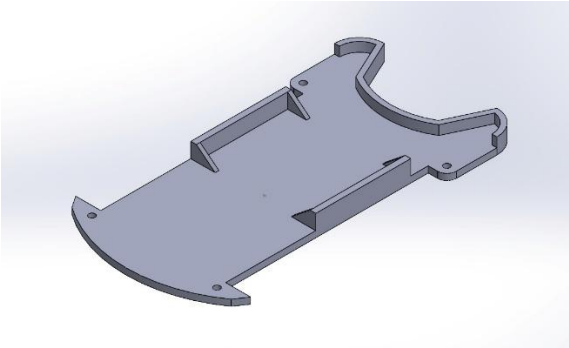

2) Lower chassis

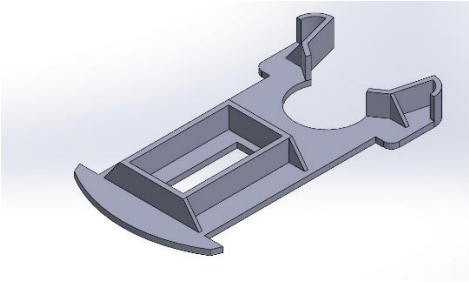

3) Support columns

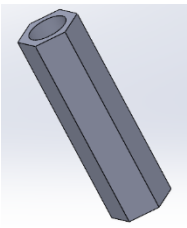

4) Bolt

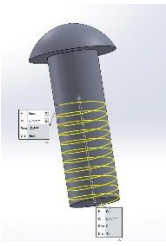

5) Caster wheel

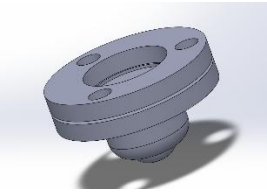

6) Motor casing

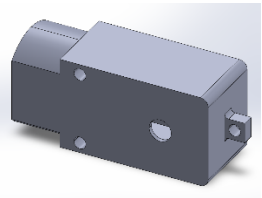

7) Motor

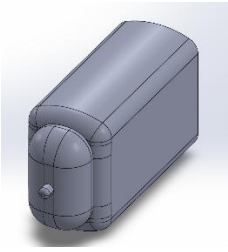

8) Tyer

9) Shaft

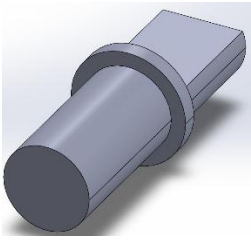

10) Wheel rim

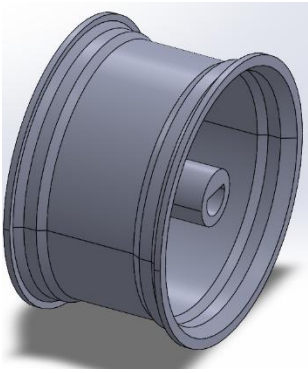
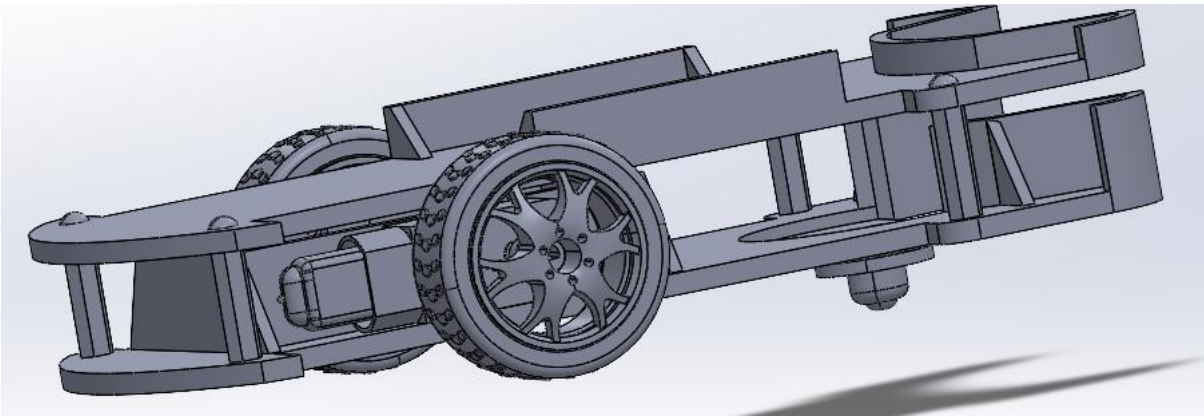
Wheel robot assembly